SMB Booster Set

SMB../SVE, SMB../VME, SMB../HME
Installation, Operation and Maintenance Manual

LOWARA
a xylem brand

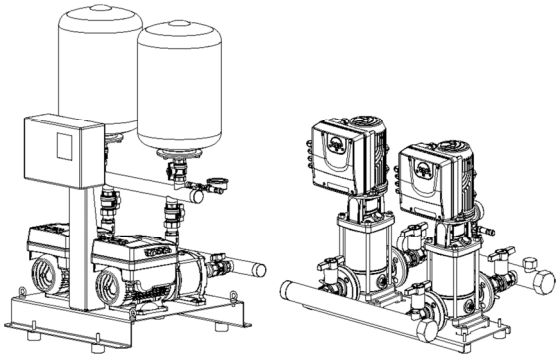

Applicare qui l'adesivo col codice a barre

Apply the adhesive bar code nameplate here

Cod.001086038EN rev.A ed.03/2017

Table of Contents

1 Introduction and Safety

1.1 Introduction

Purpose of this manual

The purpose of this manual is to provide necessary information for:

- Installation
- Operation
- Maintenance

CAUTION:

Read this manual carefully before installing and using the product. Improper use of the product can cause personal injury and damage to property, and may void the warranty.

NOTICE:

Save this manual for future reference, and keep it readily available at the location of the unit.

1.1.1 Qualified personnel

WARNING:

This product is intended to be operated by qualified personnel only.

- Correct and reliable transport, storage, installation, operation, and maintenance are required for the trouble-free and safe operation of the booster set unit. Only qualified personnel are allowed to install or operate this equipment.
- Qualified personnel are defined as trained staff, who are authorized to install, commission, and maintain equipment, systems, and circuits in accordance with pertinent laws and regulations. Also, the personnel must be familiar with the instructions and safety measures that are described in this document.

1.2 Safety

WARNING:

- The operator must be aware of safety precautions to prevent physical injury.
- Unintended rotation of motors creates voltage and can charge the unit, resulting in death, serious injury, or equipment damage. Ensure that motors are blocked to prevent unintended rotation.
- Operating, installing, or maintaining the unit in any way that is not covered in this manual could cause death, serious personal injury, or damage to the equipment. This includes any modification to the equipment or use of parts not provided by Xylem. If there is a question regarding the intended use of the equipment, please contact a Xylem representative before proceeding.
- Do not change the service application without the approval of an authorized Xylem representative.

CAUTION:

You must observe the instructions contained in this manual. Failure to do so could result in physical injury, damage, or delays.

1.2.1 Safety message levels

About safety messages

It is extremely important that you read, understand, and follow the safety messages and regulations carefully before handling the product. They are published to help prevent these hazards:

- Personal accidents and health problems
- Damage to the product
- Product malfunction

Definitions

Safety message level	Indication
DANGER:	A hazardous situation which, if not avoided, will result in death or serious injury
WARNING:	A hazardous situation which, if not avoided, could result in death or serious injury
CAUTION:	A hazardous situation which, if not avoided, could result in minor or moderate injury
Electrical Hazard:	The possibility of electrical risks if instructions are not followed in a proper manner
NOTICE:	• A potential situation which, if not avoided, could result in undesirable conditions • A practice not related to personal injury

Hot surface hazard

Hot surface hazards are indicated by a specific symbol that replaces the typical hazard level symbols:

CAUTION:

Magnetic hazard

WARNING:

A strong magnetic field is created when the rotor is removed from or inserted into the motor housing. This magnetic field can be harmful to pacemaker wearers and others with medical implants. In addition, the magnetic field may attract metal parts to the rotor which can cause injuries and/or damage the bearings of the motor.

Description of user and installer symbols

	Specific information for personnel in charge of installing the product in the system (plumbing or electrical aspects, or both) or in charge of maintenance.
	Specific information for users of the product.

1.3 User safety

General safety rules

These safety rules apply:
- Always keep the work area clean.
- Pay attention to the risks presented by gas and vapors in the work area.
- Avoid all electrical dangers. Pay attention to the risks of electric shock or arc flash hazards.
- Always bear in mind the risk of drowning, electrical accidents, and burn injuries.

Safety equipment

Use safety equipment according to the company regulations. Use this safety equipment within the work area:
- Hard hat
- Safety goggles, preferably with side shields
- Protective shoes
- Protective gloves
- Gas mask
- Hearing protection
- First-aid kit
- Safety devices

NOTICE:

Never operate a unit unless safety devices are installed. Also see specific information about safety devices in other chapters of this manual.

Electrical connections

Electrical connections must be made by certified electricians in compliance with all international, national, state, and local regulations. For more information about requirements, see sections dealing specifically with electrical connections.

Precautions before work

Observe these safety precautions before you work with the product or are in connection with the product:
- Provide a suitable barrier around the work area, for example, a guard rail.
- Make sure that all safety guards are in place and secure.
- Make sure that you have a clear path of retreat.
- Make sure that the product cannot roll or fall over and injure people or damage property.
- Make sure that the lifting equipment is in good condition.
- Use a lifting harness, a safety line, and a breathing device as required.
- Allow all system and pump components to cool before you handle them.
- Make sure that the product has been thoroughly cleaned.
- Disconnect and lock out power before you service the pump or the complete booster unit.
- Check the explosion risk before you weld or use electric hand tools.

Precautions during work

Observe these safety precautions when you work with the product or are in connection with the product:
- Never work alone.
- Always wear protective clothing and hand protection.

- Stay clear of suspended loads.
- Always lift the product by its lifting device.
- Beware of the risk of a sudden start if the product is used with an automatic level control.
- Beware of the starting jerk, which can be powerful.
- Rinse the components in water after you disassemble the pump or the booster unit.
- Do not exceed the maximum working pressure of the pump.
- Do not open any vent or drain valve or remove any plugs while the system is pressurized. Make sure that the pump or booster unit are isolated from the system and that pressure is relieved before you disassemble the pump or booster unit, remove plugs, or disconnect piping.
- Never operate a pump without a properly installed coupling guard.

Wash the skin and eyes

Follow these procedures for chemicals or hazardous fluids that have come into contact with your eyes or your skin:

Condition	Action
Chemicals or hazardous fluids in eyes	1. Hold your eyelids apart forcibly with your fingers. 2. Rinse the eyes with eyewash or running water for at least 15 minutes. 3. Seek medical attention.
Chemicals or hazardous fluids on skin	1. Remove contaminated clothing. 2. Wash the skin with soap and water for at least 1 minute. 3. Seek medical attention, if necessary.

1.4 Inexperienced users

WARNING:

This product is intended to be operated by qualified personnel only.

Be aware of the following precautions:

- This product is not to be used by anyone with physical or mental disabilities, or anyone without the relevant experience and knowledge, unless they have received instructions on using the equipment and on the associated risks or are supervised by a responsible person.
- Children must be supervised to ensure that they do not play on or around the product.

1.5 Protecting the environment

Emissions and waste disposal

Observe the local regulations and codes regarding:

- Reporting of emissions to the appropriate authorities.
- Sorting, recycling and disposal of solid or liquid waste.
- Clean-up of spills.

Exceptional sites

CAUTION: Radiation Hazard

Do NOT send the product to Xylem if it has been exposed to nuclear radiation, unless Xylem has been informed and appropriate actions have been agreed upon.

Recycling guidelines

Always follow local laws and regulations regarding recycling.

Waste and emissions guidelines

Do not dispose of equipment containing electrical components together with domestic waste.
Collect it separately in accordance with local and currently valid legislation.

1.6 Warranty

For information about warranty, see the sales contract

1.7 Spare parts

WARNING:

Only use original spare parts to replace any worn or faulty components. The use of unsuitable spare parts may cause malfunctions, damage, and injuries as well as void the guarantee.

For more information about the product's spare parts, refer to the Sales and Service department.

1.8 DECLARATION OF CONFORMITY

1.8.1 EC Declaration of Conformity (Original)

Xylem Service Italia S.r.l., with headquarters in Via Vittorio Lombardi 14 - 36075 Montecchio Maggiore VI - Italy, hereby declares that the product:

Pumping set with electric pump units equipped with integrated variable speed drive (see label on first page)

fulfills the relevant provisions of the following European directives:

- Machinery 2006/42/EC (ANNEX II - natural or legal person authorised to compile the technical file: Xylem Service Italia S.r.l.)

and the following technical standards

- EN 809:1998+A1:2009,
- EN 60204-1:2006+A1:2009

Montecchio Maggiore, 22/02/2017
Amedeo Valente
(Director of Engineering and R&D)
rev.00

1.8.2 EU Declaration of Conformity (No EMCD23)

1. Apparatus model/Product:
   see label on first page
2. Name and address of the manufacturer:
   Xylem Service Italia S.r.l.
   Via Vittorio Lombardi 14
   36075 Montecchio Maggiore VI
   Italy
3. This declaration of conformity is issued under the sole responsibility of the manufacturer.
4. Object of the declaration:
   Pumping set with electric pump units equipped with integrated variable speed drive (see label on first page)
5. The object of the declaration described above is in conformity with the relevant Union harmonisation legislation:
   Directive 2014/30/EU of 26 February 2014 (electromagnetic compatibility)
6. References to the relevant harmonised standards used or references to the other technical specifications, in relation to which conformity is declared:
   EN 61000-6-2:2006, EN 61000-6-3:2007+A1:2011
7. Notified body: -
8. Additional information:

Signed for and on behalf of: Xylem Service Italia S.r.l.
Montecchio Maggiore, 22/02/2017
Amedeo Valente
(Director of Engineering and R&D)
rev.00

Lowara is a trademark of Xylem Inc. or one of its subsidiaries.

2 Storage and Transportation

2.1 Inspect the package

1. Inspect the package for damaged or missing items upon delivery.
2. Note any damaged or missing items on the receipt and freight bill.
3. File a claim with the shipping company if anything is out of order.
4. If the product has been picked up at a distributor, make a claim directly to the distributor.

2.2 Storage guidelines

Storage location

The product must be stored in a covered and dry location free from heat, dirt, and vibrations.

NOTICE:
Protect the product against humidity, heat sources, and mechanical damage.

NOTICE:
Do not place heavy weights on the packed product.

NOTICE:
Refer also to par. 3.5 for storage limits.

2.3 Inspect the unit

1. Remove packing materials from the product.
2. Dispose of all packing materials in accordance with local regulations.
3. Inspect the product to determine if any parts have been damaged or are missing.
4. If applicable, unfasten the product by removing any screws, bolts, or straps. For your personal safety, be careful when you handle nails and straps.
5. Contact the local sales representative if there is any issue.

2.4 Transportation guidelines

Precautions

WARNING:

- Stay clear of suspended loads.
- Observe accident prevention regulations in force.
- Do not damage the cables during transport; do not squeeze, bend or drag the cable.
- Always keep the cable ends dry.
- Secure the unit against tipping over and slipping until it is mounted and fixed in its final location.
- Lift and handle the product carefully, using suitable lifting equipment (stacker, crane, crane mounting device, lifting blocks, sling ropes, etc.).
- Always lift the unit by its lifting handle.

2.5 System lifting

WARNING:

Assembled units and their components are heavy. Failure to properly lift and support this equipment can result in serious physical injury and/or equipment damage. Lift equipment only at the specifically identified lifting points. Lifting devices such as eyebolts, slings, and spreaders must be rated, selected, and used for the entire load being lifted.
Select the lifting points depending on model (see Figure 1).

WARNING: Crush Hazard

1. Always lift the unit by its lifting points.
2. Use suitable lifting equipment and ensure that the product is properly harnessed.
3. Wear personal protective equipment.
4. Stay clear of cables and suspended loads.

2.5.1 Lifting diagrams

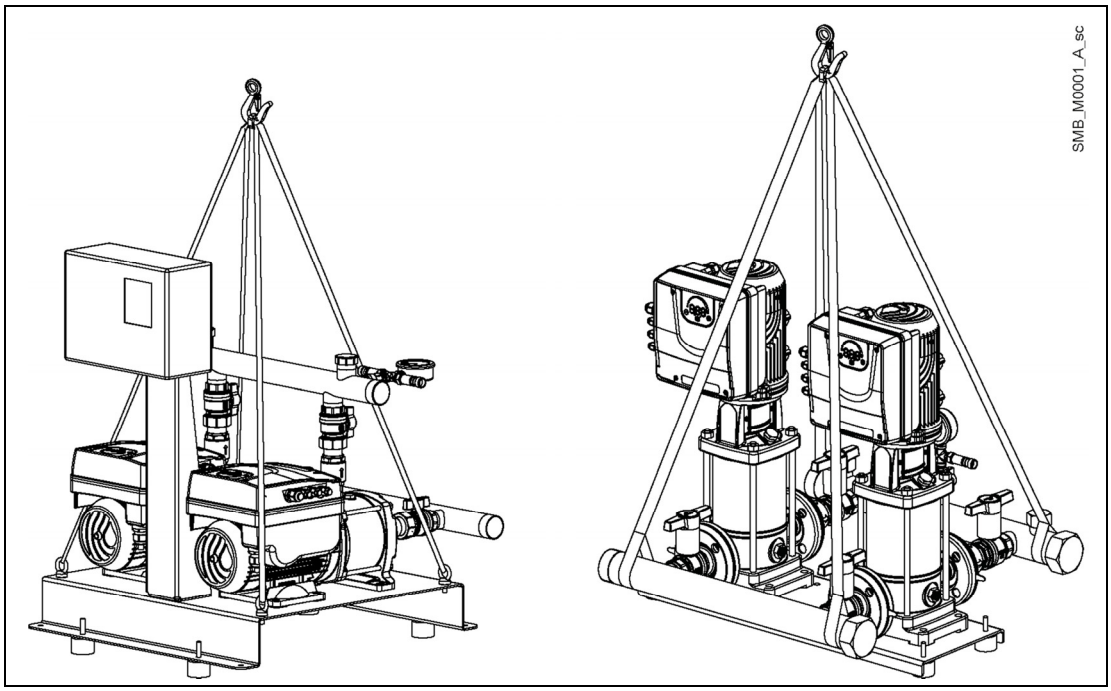

Figure 1: Lifting

3 Product Description

3.1 System description

System layout

Figure 2 and Figure 3 show a typical single-pump and multi-pump system using the unit.
When the system is connected directly to the water supply use a low-pressure switch on the suction side.

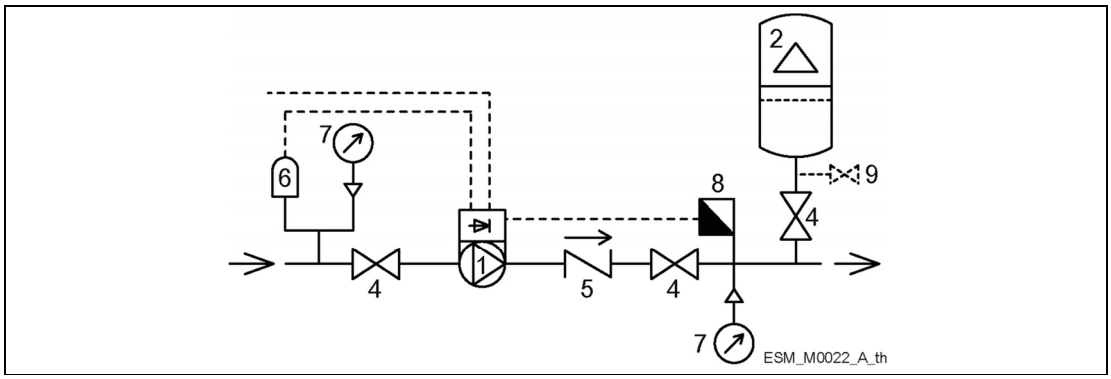

Figure 2: Single-pump system

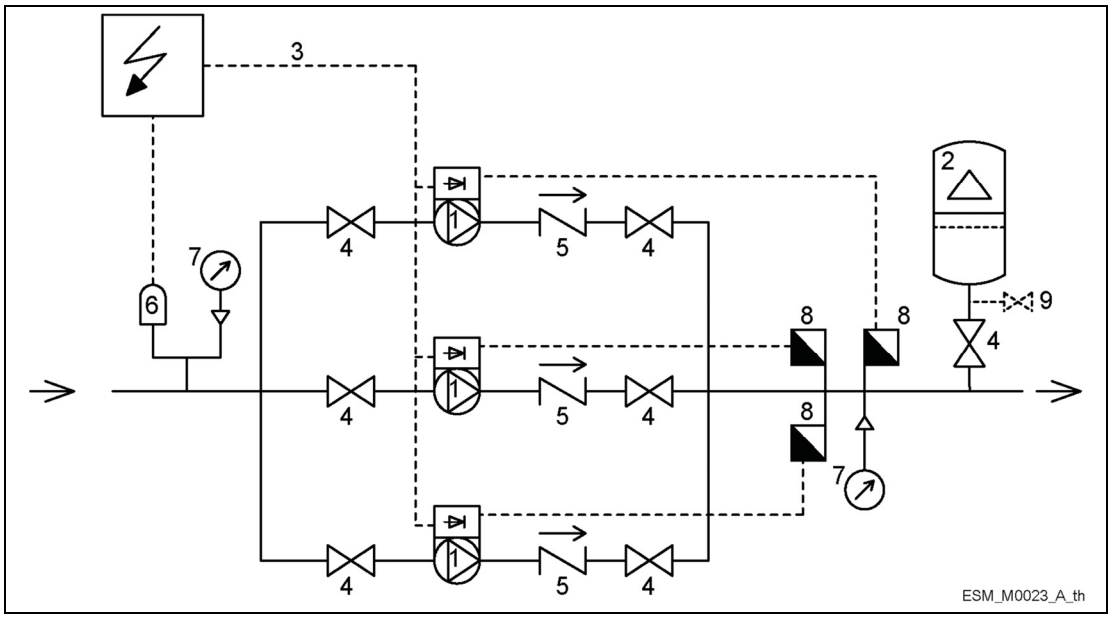

Figure 3: Multi-pump system

1. Pump with e-SM Motor Drive
2. Diaphragm pressure tank
3. Distribution panel
4. On-off valve
5. Non-return valve
6. Low water control
7. Pressure gauge
8. Pressure sensor
9. Drain tap

Pressure tank

A diaphragm pressure tank is used on the discharge side of the pump to maintain pressure in the pipes when there is no water demand. The unit stops the pump from continuing to run at zero demand and reduce the size of the tank that is required for supply purposes.
The tank must be permitted and suitable for systems pressure.

Tank selection

Variable speed pressure booster sets can operate with smaller tanks compared to traditional systems. As a rule, a tank with a capacity in liters amounting to about 10% of the flow rate of a single pump expressed in liters per minute is sufficient. The required water volume may be distributed among multiple tanks.

3.2 Product function and use

Description

In its standard version, the product is a booster unit set SMB which consists of identical variable speed electric pumps that are connected in parallel. The pumps are mounted on a common

stand, suction and delivery manifolds, on-off valves, non-return valves, pressure gauge, pressure transmitters, and a single-phase or three-phase control panel.
The system must be equipped with a membrane tank. The delivery manifold is fitted with couplings that are designed for the installation of 24 L tanks with an on-off valve. Along with the tanks, provide a applicable manifold support.
Extra floor-standing tanks may be installed and connected to the manifold.

Intended use

The product can be used to pump:
- Cold water

Refer to the standard Installation, Operation and Maintenance Manual for pump design specification.

The variable speed booster sets are made for the following applications:
- Default, pressure regulation (open loop systems)
- Level and flow regulation (open loop systems)
- Irrigation applications with single or multiple pumps.

Improper use

The product must not be used for closed loop systems.

Approval and certifications

See booster nameplate for approvals:
- CE only

3.3 Applications

The application alternatives for the product are the following:

3.3.1 Actuator (constant speed)

The unit operates as an actuator according to speed set point; this is done through user interface, the corresponding analog input or the communication bus.

3.3.2 Controller (constant pressure)

This mode is set as the default operating mode and is used for a unit in a single pump operation.

3.3.3 Cascade serial / Cascade synchronous

The units are connected via the RS485 interface and communicate via the provided protocol.
The combination of the different units which are used in a multi-pump system depends on the system requirements.
It is possible to run all pumps in cascade serial mode and cascade synchronous mode as well. If one unit fails, then each pump of the system can become the lead pump and can take control.
This mode is set as the default operating mode and is used for a booster set unit in a multipump operation. Cascade serial mode is the standard configuration.

3.4 Data plates

Data plate

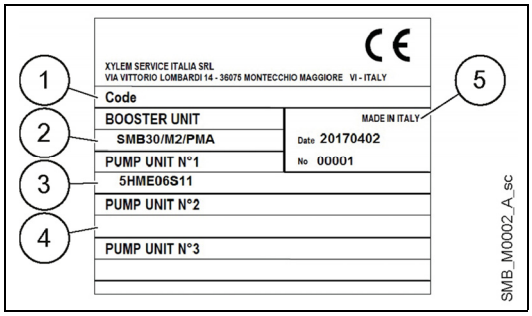

Figure 4: Data plate

1. Booster unit part number
2. Booster unit type definition code
3. Duty electric pump unit
4. Jockey electric pump unit
5. Serial Number (date+progressive number)

Type identification code

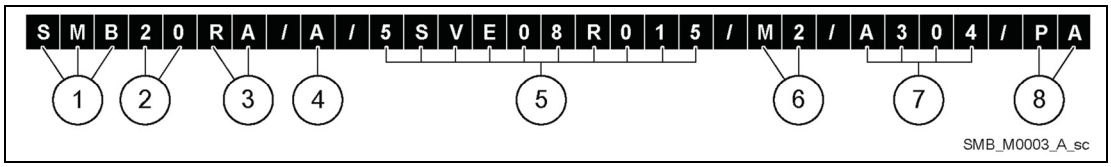

Figure 5: Type identification code

1. Series	SMB
2. Number of pumps	[20] = 2 pumps [30] = 3 pumps
3. Non-return valve	[__] = Delivery side [RA] = Suction side
4. Set drinking water certificate	A = WRAS and ACS B = ACS Z = not certified by a third party
5. Electric pump e-SM Drive	SVE VME HME
6. Control panel power supply	[M2] = Single-phase, 1 x 230 V [T3] = Three-phase, 3 x 230 V [T4] = Three-phase, 3 x 400 V
7. Material version	[__] = Standard component [A304] = Special AISI 304 version [B304] = Special AISI 304 version [C304] = Special AISI 304 version [A316] = Special AISI 316 version [B316] = Special AISI 316 version [C316] = Special AISI 316 version
8. Option	[PA] = Minimum pressure pressure switch on the suction manifold, for protection against dry running [WM] = Wall mounted control panel; cables L= 5 m
NOTE: See B/W catalogue for more details	

3.5 Booster unit technical data

NOTICE:
Data refer to standard-design products.

Table 1: Electrical, Environmetal and Installation specifications

	SMB Booster model		
Control panel supply (see to idetification code)	M2	T3	T4
Input			
Input frequency [Hz]	50/60 ± 2		
Main supply	LN	L1 L2 L3	
Nominal input voltage [V]	230 ± 10%	230 ± 10%	400 ± 10%
Max. input current continuous [A]	See rating plate on electric panel		
Max control panel power [kW]	See rating plate on electric panel		
Output			
Enclosure rate	IP 55 - Protect the product from direct sunlight and rainfall		
Liquid temperature [°C] / [°F]	0÷80 / 32÷176 (SMB..SVE, SMB..VME) 0÷60 / 32÷140 (SMB..HME..S)		
Relative humidity RH releated to operating temperature [°C] / [°F]	min 5% to max 50% RH @40 / 104 min 5% to max 90% RH @20 / 68		
Storage relative humidity	5%÷95% RH		
Storage temperature [°C] /[°F]	-25÷65 / -13÷149		
Operating temperature [°C] / [°F]	-20÷50 / -4÷122		
Altitude [m] / [ft]	Max. 1000 / 3280 above sea level For installation over 1000 / 3280 above sea level, de-rating may occur		
Sound pressure LpA [dB(A)]	<62 @3000 rpm <66 @3600 rpm		
Maximum operating pressure [bar]	8 or 10 or 16, depending on the type of pump see Installation, Operation, and Maintenance Manual of the pump		
Minimum suction pressure	According to NPSH curve with a margin of at least 0.5 m for air-free water		
Maximum suction pressure	Make sure the inlet pressure plus the closed delivery pressure does not exceed the maximum operating pressure		
Pumps general data	See the Installation, Operation, and Maintenance Manual of the pumps		
Diaphragm pressure tanks [bar]	See the Installation, Use, and Maintenance Instructions Manual of the tank If installed, tanks may limit the operating temperature and pressure of the SMB booster unit		

3.6 Dimensions and weights

Reading instructions

- Booster unit: see technical documentation.
- Smart Drive Electropumps: see Installation, Operation, and Maintenance Manual.

3.7 Design and layout

3.7.1 Booster unit parts and description as standards configuration

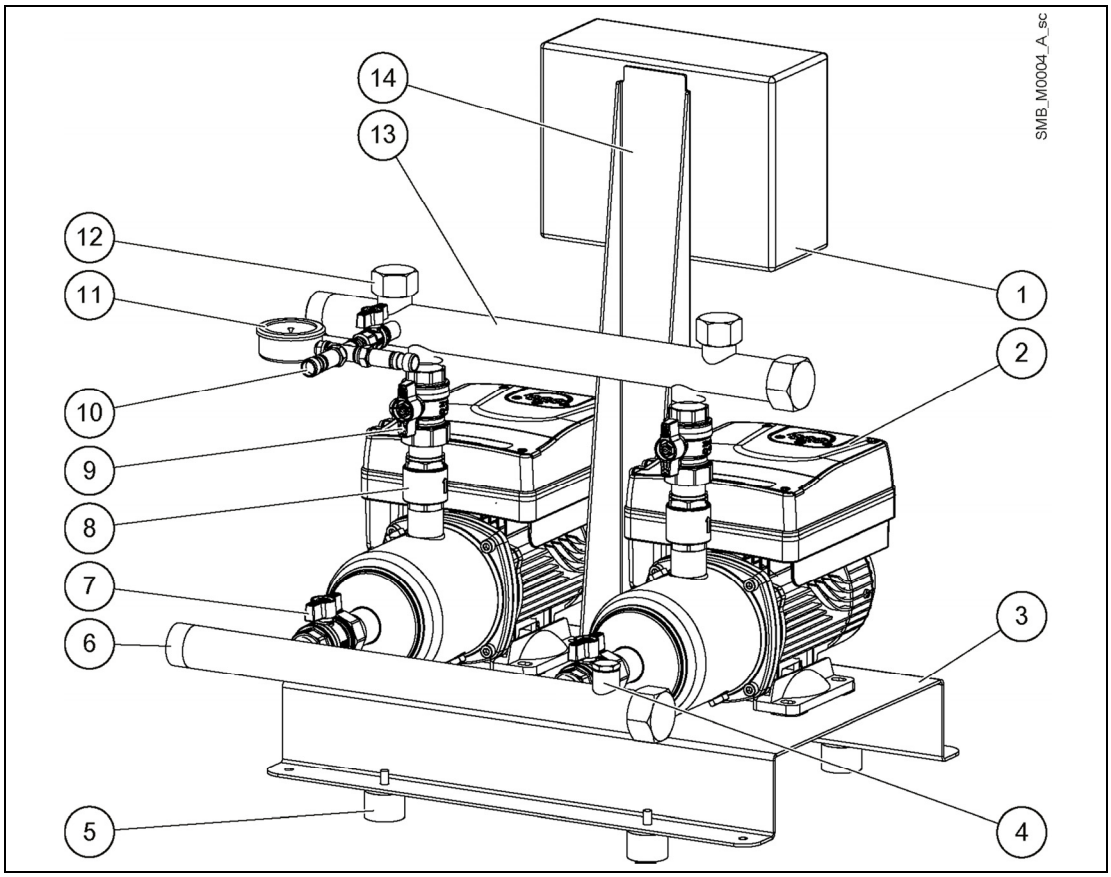

Figure 6: Booster unit

Position number	Description	Q.ty
1.	Control Panel	1
2.	Electric pump E (e-SM drive) series	n
3.	Baseplate	1
4.	Priming connection	1
5.	Damper	2 x n
6.	Suction manifold	1
7.	Suction on-off valve	n
8.	Non-return valve	n
9.	Delivery on-off valve	n
10.	Pressure transmitter	n
11.	Pressure gauge	1
12.	Tank connection	1/2/3
13.	Delivery manifold	1
14.	Bracket support	1

3.7.2 Frequency converter parts and description

See Installation, Operation, and Maintenance Manual for Smart Drive Electropumps.

4 Mechanical Installation

4.1 Installation site checklist

DANGER:

Never install the unit in an explosive or flammable environment.

WARNING:

- Always refer to the local and national regulations, legislation, and codes in force regarding selection of installation site, and water and power connections.
- Keep the manual, drawings, and diagrams accessible for detailed installation and operation instructions. It is important that the manual is available for equipment operators.
- Ensure that the ingress protection rating of the Unit (IP 55, Type 1) is suitable for the installation environment.

CAUTION:

- Ingress protection. IP55 (type 1) rating can only be guaranteed if the unit is properly closed.
- Make sure that there is no liquid on the unit before opening the control panel and plastic cover of the frequency converter unit.
- Ensure all cable glands and unused holes for glands are properly sealed.
- Make sure that the panel and plastic cover of the frequency converter unit is correctly closed.
- Device damage through contamination. Do not leave unit without the terminal box cover.
- Remove scraps, dirty and solid parts from inside control panel and the frequency converter unit.

4.2 Unit installation

Install the unit according to the systems liquid flow.

- Usually arrows on the pump housing show flow and rotating direction.
- The standard rotating direction for the unit is clockwise (seen from fan cover). For more information contact Service.
- The unit must be installed according to Figure 7.
- Always install a backflow-prevention device on the suction side.
- Install the unit a well-ventilated room, allowing sufficient clearance (0.5 m) on all sides and front for maintenance. Guarantee 0.5 m in height above the highest part.
- Position the set on a level and sturdy surface.
- It is recommended to install a closing valve immediately after the unit.
- It is recommended to install a drain valve for testing if no tap has been provided near the unit.

4.2.1 Piping

- The pipes that are connected to the set must be adequately sized (if possible, according to manifold diameter). You can use either end of the manifold, but do not forget to plug the unused end.
- Suction pipe and foot valve must be of sufficient size to prevent excessive flow resistance and the consequent cavitation phenomena.

NOTICE:
To prevent undue stress, expansion joints and suitable pipe supports should be provided (Figure 7). The weight of the pipes and tanks increases when they are filled with water.
Before starting the set, make sure you have closed and tightened all the unused couplings.

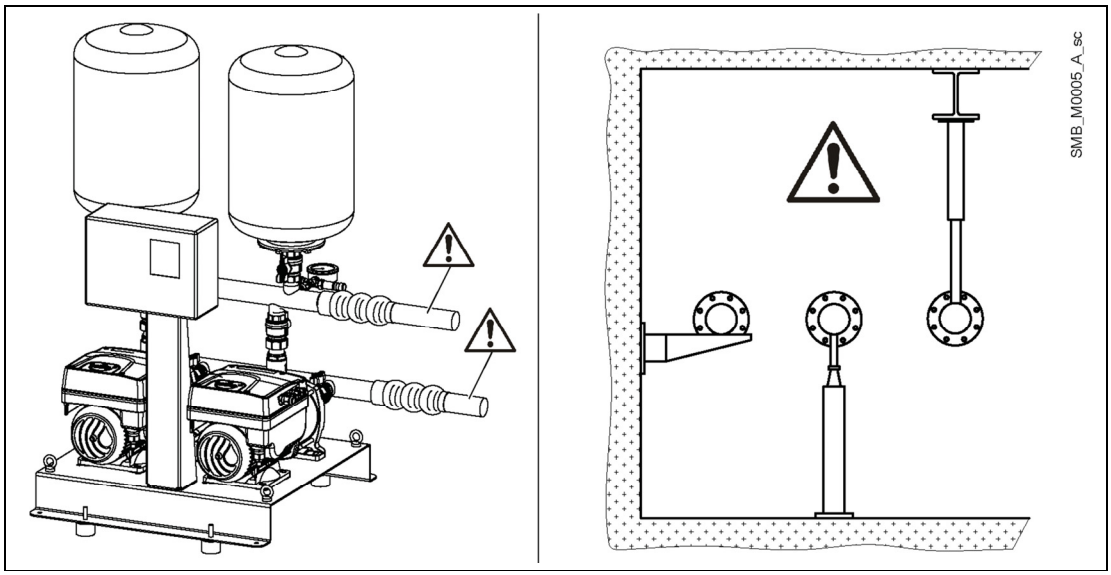

Figure 7: Unit installation

4.2.2 Protection against dry running

The standard electric panel is ready for connection of a common float switch applicable for open tanks or a minimum pressure switch on the suction side (recommended value 0.2÷0.4 bar). When the minimum pressure conditions are restored, the pumps start up automatically. If protection against dry running is considered superfluous, do not remove the jumper on the terminal in electrical panel. The correct terminal numbers are specified in wiring terminal that is found inside the panels.

NOTICE:

- Factory setting: the electric pump e-SM drive comes from the factory with the software protection enabled.
- No dry running control: the booster unit comes from factory with jumper already installed, which disabled the control.

With the optional electronic level kit, control by electric probes is possible.
Put the three electric probes that are supplied with the kit inside the storage tank and connect them to the terminal in the electric panel.
The correct terminal numbers are specified in the wiring diagram inside the panel:

- Probe Max (A) determines the unit activation level during the filling of storage tank.
- Probe Min (B) determines the unit deactivation level.
- Probe (C) must be put at a lower level than that of the bottom probe (B).

4.3 Outdoor installation

When the unit is installed outdoors a suitable cover must be provided. See Figure 8.
The cover must be sized to ensure that the booster unit is not exposed to snow, rain, or direct sunlight.

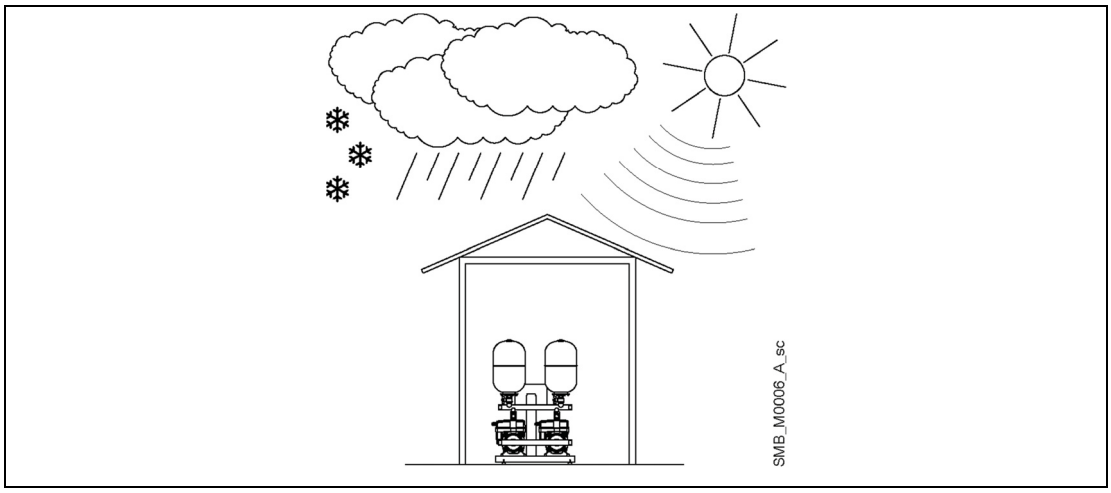

Figure 8: Outdoor unit installation

5 Electrical Installation

5.1 Precautions

WARNING:

- EQUIPMENT HAZARD. Rotating shafts and electrical equipment can be hazardous. All electrical work must conform to national and local electrical codes. Installation, start-up, and maintenance must be performed by trained and qualified personnel. Failure to follow these guidelines could result in death or serious injury.

Electrical Hazard:

- All electrical wiring must be carried out by an authorized electrician, in accordance with the electrical regulations locally in force.

See the wiring diagram that is located inside the control panel for electrical connections.

5.2 Electrical requirements

The local regulations in force overrule specified requirements listed below.

Electrical connection checklist

Check that the following requirements are met:

- The electrical leads are protected from high temperature, vibrations, and collisions.
- The current type and voltage of mains connection must correspond to the specifications on the data plate on the control panel.
- Make sure that the supply cable can handle the rated current of the booster unit, and connect it to the corresponding terminals in the electric panel. The wiring diagram and the labels on the panel provide the necessary information for connection and the required power supply values.
- Connect the power supply cable:
  - Single phase version to the L - N terminals, PE to grounding terminal
  - Three phases version to L1, L2, L3 terminals, PE to grounding terminal.
- Cables, when visible, must be suitably protected
- The power supply line is provided with:
  - A high-sensitivity differential switch (30 mA) [residual current device RCD] suitable for earth fault currents with DC or pulsating DC content (a type B RCD is suggested)
  - A mains isolator switch with a contact gap of at least 3 mm.

The electrical control panel checklist

NOTICE:
In its standard version, booster unit is shipped with control panel.
When booster unit is sold without control panel, to secure that the control panel must match the ratings of the electric pump.
Incorrect combinations could fail to guarantee the protection of the unit.

Check that the following requirements are met:

- The control panel must protect the pump against short-circuit. A time lag fuse or a circuit breaker (type C model is suggested) can be used to protect the pump.
- The pump has built in overload and thermal protection, no additional overload protection is required.

Electrical Hazard:

Before starting work on the unit, make sure that the unit and the control panel are isolated from the power supply and cannot be energized.

Grounding (earthing)

Electrical Hazard:

Always connect the external protection conductor to ground (earth) terminal before making other electrical connections.
All electrical equipment must be ground (earth) connected. This applies to the pump unit and related equipment. Verify the pump ground terminal is earthed.

- Keep the ground wire connections as short as possible.
- Use high-strand wire to reduce electrical noise is recommended.

5.3 Wire type and ratings

In its standard version, the booster set comes with motor power cables and control cables.
If the motor power cable or control cable, or both, must be replaced or added, see Installation, Operation, and Maintenance Manual for Smart Drive Electropumps.

5.4 Power supply connection

WARNING:

- Do not make any connection in the pump control box unless the power supply has been switched off for at least 4 min.
- In its standard version, the booster set comes with motor power cables. If the power cable of the motor must be replaced or added, fit a new one of a cross-section that is suited to the maximum current consumption of the electric motor.

5.4.1 Control panel connection

See the wiring diagram inside the control panel.

5.4.2 Frequency converter unit connection

See Installation, Operation, and Maintenance Manual for Smart Drive Electropumps.

6 Operation

In case of co-existance of two or more of the following conditions:
- high ambient temperature
- high liquid temperature
- duty points insisting on unit maximum power
- persisting undervoltage of mains,

life expectancy of the unit may be affected and/or derating may occur: contact your Sales and Service Department for more information.

6.1 Discharge time

WARNING:

Disconnect and lock out electrical power and wait for the minimum waiting time specified below. Failure to wait the specified time after power has been removed before performing service or repair could result in death or serious injury.

Frequency converters contain DC-link capacitors that can remain charged even when the frequency converter is not powered. To avoid electrical hazards, disconnect:
- AC mains
- Any permanent magnet type motors
- Any remote DC-link power supplies, including battery backups, ups and DC-link connections to other frequency converters.

Wait for the capacitors to discharge completely before performing any service or repair work. Refer to the table 2 for wait times.

Table 2: Wait times

e-SM Drive model	Minimum waiting times [min]
103, 105, 107, 111, 115	4
303, 305, 307, 311, 315, 322	

6.2 Start or stop the unit

The starting and stopping of the pumps are determined based on the unit to be controlled (pressure, level) settings of the controller. Each frequency converter is connected to a sensor. The frequency converters share all the information and provide for cyclic changeover.

Electrical Hazard:

Disconnect the power supply before making any adjustments.

For the settings, refer to the Installation, Operation, and Maintenance Manual for Smart Drive Electropumps.

Figure 9 shows the operating method with the curves for two pumps, pressure regulation mode.
- The tank supplies water upon demand by a end-user.
- When the pressure drops below the PS value, the first pump is started; the speed is adjusted to maintain a constant pressure as the demand increases.
- When the demand decreases the speed is decreased until minimum speed is reached; at this point one of the pumps is deactivated.
- If the demand keeps increasing and the pump reaches maximum speed, the second pump is started and the speed is adjusted to maintain a constant pressure.
- If the demand decreases further the pump slows down, fills the tank and then stops when the PS value is reached.

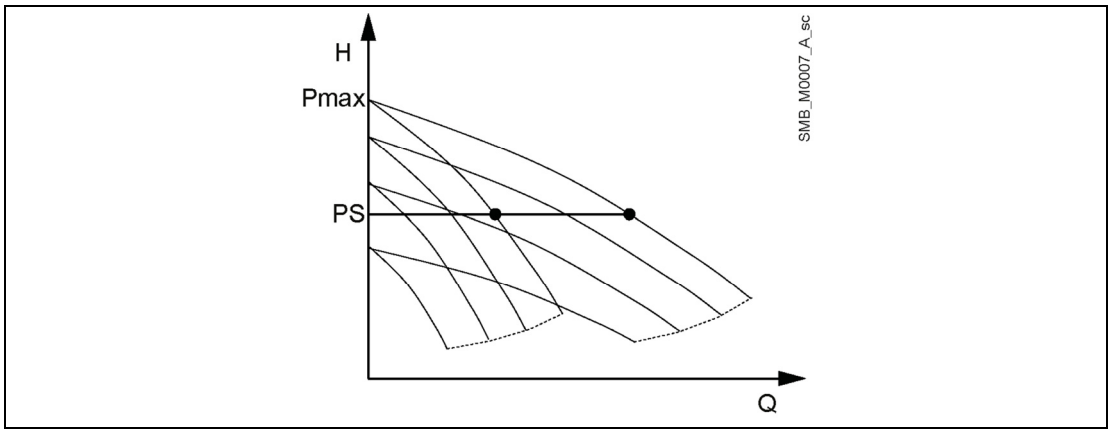

Figure 9: Operating method

H	Head	Pmax	Max. pressure
Q	Flow	PS	Pressure setting value

Frequency converter adjustments

Modifying the settings, see Installation, Operation, and Maintenance Manual for Smart Drive Electropumps. Use the frequency converter keypanel to set a new pressure adjustment value, select the time ramps, check the latest alarms, or access all the adjustment settings.
Make sure that the new selected value is in the head range that is specified in the pump rating plate.

Tank precharge

To ensure its proper operation, the diaphragm pressure tank must be precharged to 0.9 x adjustment pressure value. The precharge operation must be performed with the tank empty.

6.3 Startup

To start the set, proceed as follows:
1. Connect the water supply.
2. Connect the power supply.
3. Check the tank precharge value.
4. Close the pump delivery valves.
5. Prime the set (see pump Instructions Manual) and suction manifold.
6. To supply power and set the converter to manual mode operation, operate the switch on the panel.
7. Start the first pump.
8. Slowly open the pump delivery valve and bleed the air.
9. Repeat the preceding operations for the other pumps.
10. Set the converters to automatic mode operation.

How to modify the settings

After the set has been started, proceed as follows to modify the settings within the maximum pressure limits of the pumps or system, or both:
1. Determine the required pressure value.
2. Set the new value on the control panel of one of the converters; the setting is modified automatically on the other converter also.

7 Maintenance

7.1 General

Electrical Hazard:

Before any service or maintenance disconnect the system from the power supply and wait at least 4 min before starting work on or in the unit (the capacitors in the intermediate circuit are discharged by the internal discharge resistors).

The booster unit does not require any special maintenance.

Check list

1. Make sure that the cooling fan and the vents are free from dust.
2. Make sure that the ambient temperature is correct according to the limits of the booster unit.
3. Make sure that qualified personal perform all modifications of the booster unit.
4. Make sure that the unit is disconnected from the power supply before any work is carried out. Always consider the pump and motor Instruction.
5. The electric panels and frequency converters do not require any maintenance.
6. Diaphragm pressure tank maintenance: see the Installation, Use, and Maintenance Instructions. Check the precharge at least once a year.

7.2 Check the functions and parameters

If the hydraulic system is changed then follow this procedure:
1. Make sure that all functions and parameters are correct.
2. Adjust the functions and parameters if necessary.

8 Troubleshooting

Introduction

WARNING:

The maintenance and repair operations must be performed by qualified personnel.
Before servicing the set, disconnect the power supply and make sure there is no pressure in the hydraulic components.
Wait at least 4 min before starting work on or in the unit. The capacitors in the intermediate circuit are discharged by the internal discharge resistors.

The frequency converter memorizes the last alarms triggered. Refer to the frequency converter operating instructions for the types of malfunctions and directions on how to check the last alarms triggered.

8.1 Set is off

Cause	Solution
Power supply disconnected	Connect power supply
Switch in OFF position	Set switch to ON

8.2 Motor does not start

Cause	Solution
Power supply disconnected	Connect power supply
Triggering of motor thermal protector	Eliminate malfunction and reset the switch
Defective motor	Repair or replace the motor

8.3 Frequent startups and stops

Cause	Solution
Defective tank	Repair or replace the tank
Tank Precharge wrongs	Set new pressure precharge value in according to pump and set point
Precharge pressure tank is zero	The tank must be precharged

8.4 The pump speed increases and decreases without stop, and with no water consuption (user closed)

Cause	Solution
Water leaks through the non-return valve	Check the hydraulic system and check the valve
Tank damaged or undersized	Repair or replace the tank

8.5 The motor runs but no water is delivered

Cause	Solution
No water on suction side or inside pump	1. Fill (prime) the pump or suction piping 2. Open the on-off valves
Air in suction piping or pump	Bleed the pump, check the suction connections
Loss of pressure on suction side	Check the NPSH and, if necessary, modify the system
Check valve blocked	Clean the valve
Clogged pipe	Clean the pipe

8.6 Pump leaks water

Cause	Solution
Defective mechanical seal	Replace the mechanical seal
Undue mechanical stress on pump	Support the pipes

8.7 Too noisy

Cause	Solution
Water return when pumps stop	Check the non-return valve
Cavitation	Check suction
Pump rotation hindered	Check for undue mechanical stress on pump

8.8 The unit does not generate the desiderate pressure

Cause	Solution
The pumps rotate in wrong direction	Check the correct connection to the motor by exchanging two leads
On-off valves closed	Open the valves
Air in the suction pipe	1. Eliminate the air 2. Prime the pumps
Excessive suction lift	Reduce the suction lift
Excessive flow resistance on suction side	Increase the diameter of the pipes
Foot valve damaged	Replace the foot valve
Excessive flow resistance in delivery pipes or valve, or both	Reduce water leaks

8.9 Triggering of general system protection (fuses)

Cause	Solution
Short circuit	1. Check the connection cable 2. Check the motor

8.10 Triggering of differential protection

Cause	Solution
The motor is damaged	Replace the motor
The power cable of the motor is faulty or worn	Replace the cable
The residual circuit breaker is not compliant to specific	Replace the residual circuit breaker
Residual current to high	Contact technicians qualified to modify the electrical installation

8.11 Pump runs at maximum speed without stops

Cause	Solution
Pressure set point not suitable for the system (the value is higher than the pump is able to deliver)	Set new set point in according to pump performance
Sensor is not connected or damaged	Check the hydraulic and electrical connection of sensor

8.12 Only one pump is operating

Cause	Solution
Pumps have different setting	Check frequency converter setting

8.13 There is water demand but pump does not start

Cause	Solution
Set point is set to zero	1. Check frequency converter setting 2. Set the set point

Xylem Service Italia S.r.l.
Via Vittorio Lombardi 14
36075 – Montecchio Maggiore (VI) - Italy
www.xyleminc.com/brands/lowara

LOWARA
a xylem brand